THREADS --- 1 ½ ----- 11 ½ NPSM

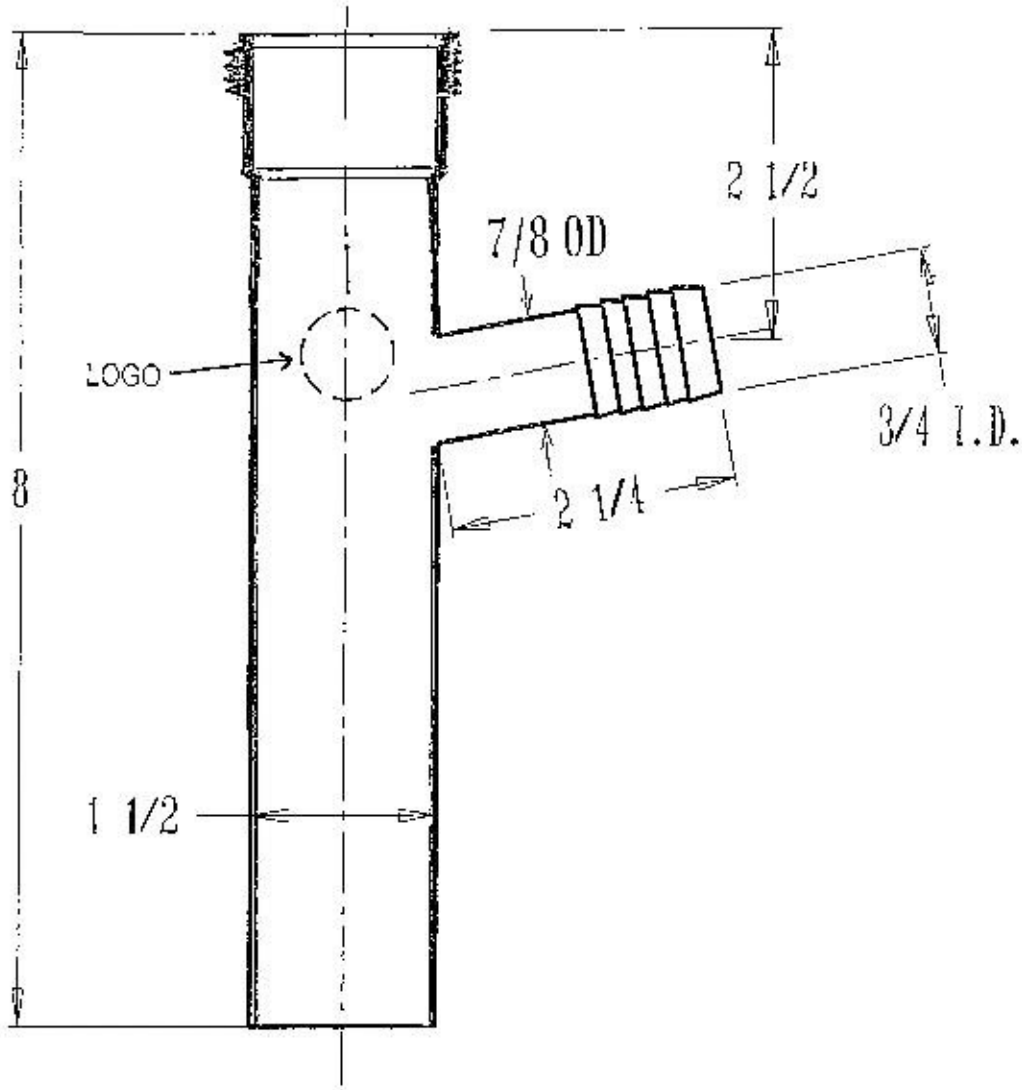

91734B		
J & B PRODUCTS, INC. 6351 ENTERPRISE DRIVE SOUTH BEND, IN 46628		
BRANCH TAIL PIECE 3/4 HOSE BRANCH		
DATE:	SCALE:	MATERIAL:
12/20/06	INCHES	POLYPROPLENE